V1.0 9515198

10 GALLON ALUMINUM RESERVOIR

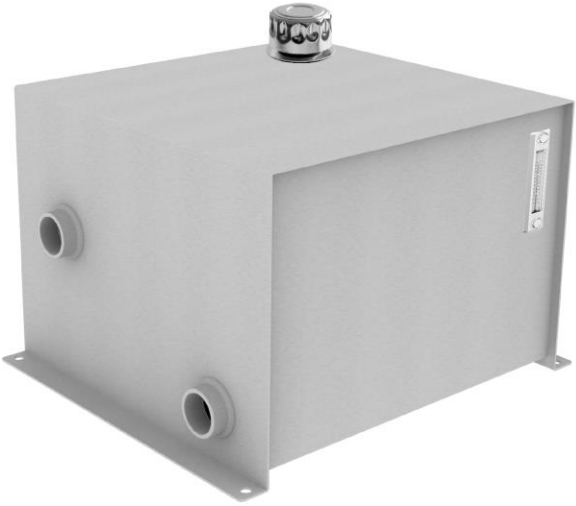

Please read and understand all instructions before use. Retain this manual for future reference.

TABLE OF CONTENTS

Introduction 3
Safety 3
Work Area 3
Personal Safety 4
Personal Protective Equipment 4
Personal Precautions 4
Specific Safety Precautions 4
Unpacking 8
Identification Key 8
Assembly & Installation 9
Care & Maintenance 9
Disposal 10
Specifications 11

INTRODUCTION

This 10-gallon hydraulic reservoir is built from durable aluminum. Designed for stationary applications, it includes a push-on breather cap, base flange mounting, and large 1-1/4 in. NPTF inlet and outlet ports. Its simple construction is ideal for low-cost setups that don't require internal baffling, in-tank return, or a temperature/level gauge.

SAFETY

WARNING! Read and understand all instructions before using this tool. The operator must follow basic precautions to reduce the risk of personal injury and/or damage to the equipment.

Keep this manual for safety warnings, precautions, operating or inspection and maintenance instructions.

HAZARD DEFINITIONS

Please familiarize yourself with the hazard notices found in this manual. A notice is an alert that there is a possibility of property damage, injury or death if certain instructions are not followed.

DANGER! This notice indicates an immediate and specific hazard that **will** result in **severe personal injury or death** if the proper precautions are not taken.

WARNING! This notice indicates a specific hazard or unsafe practice that **could** result in **severe personal injury or death** if the proper precautions are not taken.

CAUTION! This notice indicates a potentially hazardous situation that may result in minor or moderate injury if proper practices are not taken.

NOTICE! This notice indicates that a specific hazard or unsafe practice will result in equipment or property damage, but not personal injury.

WORK AREA

1. Operate in a safe work environment. Keep your work area clean, well-lit and free of distractions. Place lights so you are not working in a shadow.
2. Keep anyone not wearing the appropriate safety equipment away from the work area.
3. Store tools properly in a safe and dry location. Keep tools out of the reach of children.
4. Do not install or use in the presence of flammable gases, dust or liquids.

PERSONAL SAFETY

WARNING! Wear personal protective equipment approved by the Canadian Standards Association (CSA) or American National Standards Institute (ANSI).

PERSONAL PROTECTIVE EQUIPMENT

1. Always wear impact safety goggles that provide front and side protection for the eyes. Eye protection equipment should comply with CSA Z94.3-07 or ANSI Z87.1 standards based on the type of work performed.
2. Wear gloves that provide protection based on the work materials or to reduce the effects of tool vibration.
3. Wear protective clothing designed for the work environment and tool.
4. Non-skid footwear is recommended to maintain footing and balance in the work environment.

PERSONAL PRECAUTIONS

Control the tool, personal movement and the work environment to avoid personal injury or damage to the tool.

1. Do not operate any tool when tired or under the influence of drugs, alcohol or medications.
2. Avoid wearing clothes or jewelry that can become entangled with the moving parts of a tool. Keep long hair covered or bound.
3. Do not overreach when operating the tool. Proper footing and balance enables better control in unexpected situations.

SPECIFIC SAFETY PRECAUTIONS

WARNING! DO NOT let comfort or familiarity with product (gained from repeated use) replace strict adherence to the tool safety rules. If you use this tool unsafely or incorrectly, you can suffer serious personal injury.

1. Use the correct tool for the job. This tool was designed for a specific function. Do not modify or alter this tool or use it for an unintended purpose.
2. Do not use the tool if any parts are damaged, broken or misplaced. Repair or replace the parts.
3. Do not use the hydraulic system if it appears or sounds abnormal. Have a qualified technician inspect and verify that the system and its components are operating correctly before resuming use.

4. Only trained individuals should assemble, maintain, or repair the reservoir. This work should be performed by persons with sufficient mechanical skill, experience, and judgment (e.g., certified repair shops) to avoid unsafe conditions or modifications.
5. Ensure all safety interlocks are active and functional to prevent unintended hydraulic movement.
6. Secure loose clothing, long hair, and accessories. These must be fully contained or covered to prevent entanglement with moving parts.
7. Hydraulic system design and operation require proper knowledge. Understand hydraulic theory thoroughly before installing or using the reservoir or other system components.
8. Do not pressurize the reservoir. This unit is vented through the filler cap and intended for use only in systems requiring a vented reservoir.
9. Never remove the filler cap while the system is running. Hot fluid may escape and cause burns. Shut down the system and let it cool completely before removing the cap.
10. Do not use in mobile applications. This reservoir is for stationary use only and does not include internal baffles to prevent fluid sloshing.
11. Use a pump with a maximum flow rate of 3.33 GPM. Exceeding this may cause overheating; a heat exchanger is recommended for higher flow systems.
12. Do not overfill. Hydraulic fluid expands with heat. Maintain at least 1 in. (2.5 cm) of space below the filler neck for expansion.
13. Never add fluid during operation in an attempt to extend system capacity. All system components must be correctly rated and sized for the intended application.
14. Do not insulate the reservoir. Maintain adequate airflow on all sides to dissipate heat. Leave at least 24 in. (65 cm) of clearance above and around the reservoir, and at least 4 in. (10 cm) below. Keep surfaces clean and free of debris.
15. This reservoir does not contain a built-in filtration system. Ensure appropriate filtration is used elsewhere in the hydraulic circuit.
16. Use only hydraulic oil of the correct viscosity. In cold environments, consider using a reservoir heater. Follow all heater installation instructions and observe the following precautions:
    a. Use a heater only when absolutely necessary, and not with oils prone to oxidation or contamination.

b. Do not oversize the heater. Use one matched to the reservoir volume and target temperature.

c. Only use heaters with a thermostat or temperature control — never a constantly heating unit.

d. If using an immersion heater, ensure it remains fully submerged at all times.

e. Inspect heaters regularly. Do not assume they are working — verify correct operation and temperature settings frequently.

WARNING! Installation, commissioning and maintenance of hydraulic systems and their components is to be carried out only by suitably qualified personnel and in strict observance of all relevant safety regulations.

WARNING! This equipment is only intended to be a reservoir for hydraulic fluids used in hydraulic systems. Do not use to store fuel.

WARNING! The surfaces of the hydraulic reservoir assist in regulating the temperature of the oil and will get hot.

WARNING! PRESSURIZED SYSTEM. Shut off, relieve system pressure, and tag out prior to any maintenance or repair of the hydraulic system.

WARNING! Do not stand on, or place heavy objects on the reservoir.

WARNING! RISK OF FIRE. Engine fuel and hydraulic fluids are combustible.

HYDRAULIC PRECAUTIONS

DANGER! Seek immediate medical attention if hydraulic fluid under pressure penetrates your skin. See Injection Injury precautions for instructions before using a pressurized hydraulic system.

1. Do not touch or handle hydraulic hoses or components while under pressure. Hydraulic fluid escaping under pressure has sufficient force to penetrate your clothing and skin. A pinpoint hole may inject hydraulic fluid into your body. Seek immediate medical attention if this occurs (see Injection Injury).
2. Never exceed the hydraulic system's load capacity (see Specifications).
3. Do not adjust the hydraulic system's relief setting. The settings are pre-set by the factory.
4. Hydraulic oil under pressure is hot and can cause a burn injury if touched, sprayed or spilled. Allow the hydraulic system to cool before conducting maintenance.
5. Hydraulic components require regular inspection. Release all pressure

from the system before you inspect it. Replace damaged hydraulic parts with identical manufacturer's components.

6. Do not attempt makeshift repairs to a hydraulic system. Such repairs can fail suddenly and create a hazardous condition.
7. A damaged or disconnected hydraulic hose under pressure may whip around and inflict personal injury or damage the work area. Secure the hose to a fixed or permanent structure with clamps or cable ties.
8. Hydraulic fluid has a combustible flash point of 200°F (93°C). Do not expose the fluid to an ignition source.
9. Change your clothing immediately if sprayed with hydraulic fluid. Store clothing or rags contaminated with hydraulic fluid in an approved metal safety can with a spring-closing lid and venting designed to contain a fire.
10. Only use hydraulic fluid in the pump. Do not substitute or mix brake fluid, or any other fluid, with the hydraulic fluid. This can result in a pump failure and injure the user or bystander. It may also damage the pump.

INJECTION INJURY

DANGER! Seek immediate, professional medical treatment if fluid penetrates your skin. It may feel like a pricking or sting. Do not wait for the appearance of symptoms. A toxic reaction can occur from the exposure. Delay in treatment can lead to amputation or death.

Inform the medical staff that you have a fluid penetration injury as soon as you arrive at the medical facility. The severity of the symptoms will depend on the type of fluid injected. Bring the Safety Data Sheet for the fluid with you to the medical facility if possible.

INJECTION PRECAUTIONS

Fluid can penetrate the skin at 100 PSI pressure. Fluid escaping under pressure from the tool has sufficient force to penetrate your clothing and skin. Follow the precautions below to avoid an injection injury.

1. Always check for leaks wearing a face shield, safety goggles, rubberized gloves and protective clothes.
2. Release all pressure from the system before you inspect it.
3. Do not use your hands to detect a fluid leak. Use a large piece of wood, cardboard or paper and watch for discolouration.
4. Replace damaged parts with identical manufacturer's components to ensure it is rated to handle the pressure.

UNPACKING

WARNING! Do not operate the tool if any part is missing. Replace the missing part before operating. Failure to do so could result in a malfunction and personal injury.

Remove the parts and accessories from the packaging and inspect for damage.

IDENTIFICATION KEY

A Reservoir Body

B Cap, Vented Filler

C Port, 1-1/4 in. NPTF Return

D Port, 1-1/4 in. NPTF Output (not shown)

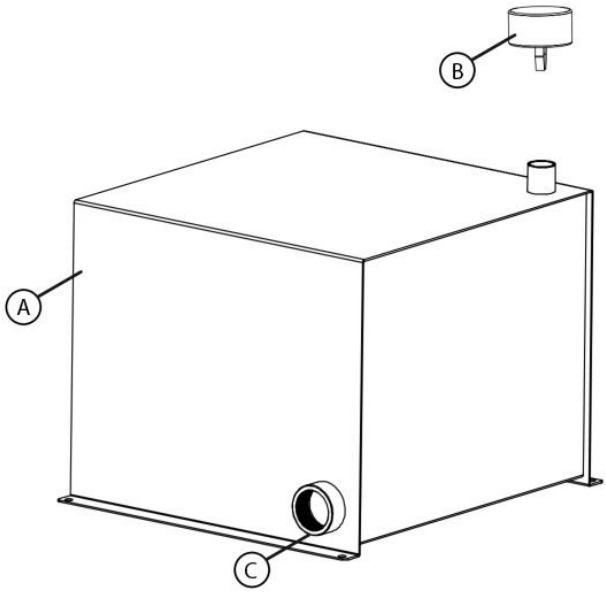

ASSEMBLY & INSTALLATION

Determine where the hydraulic reservoir will be mounted.

- The reservoir must be installed and operated in a way that prevents hydraulic oil from escaping and polluting the environment. Check with your local, provincial, or national authorities for applicable regulations to ensure that accidental leaks cannot reach drainage systems or waterways.
- Use an oil tray beneath the reservoir to help contain any accidental discharge.
- Allow adequate clearance around the reservoir for proper airflow to aid heat dissipation. Maintain at least 24 in. (65 cm) of space above and around the reservoir and a minimum of 4 in. (10 cm) below it.
- It is recommended to position the reservoir's outlet port below the pump's inlet port to reduce the risk of pump cavitation.
- Choose a location that allows safe and easy access for routine inspection, filling, and maintenance.
- Ensure the mounting surface can support the full weight of the reservoir, including the weight of the hydraulic fluid when filled.

Use appropriately sized fasteners (not included):

- Use 3/8 in. or 1/2 in. (M8 or M10) bolts with suitable flat washers, lock washers, and/or self-locking nuts.

CARE & MAINTENANCE

1. Maintain the tool with care. A tool in good condition is efficient, easier to control and will have fewer problems.
2. Inspect the tool fittings, alignment, hoses and power supply cord periodically. Have damaged or worn components repaired or replaced by an authorized technician. Only use identical replacement parts when servicing.
3. Only use accessories intended for use with this tool.
4. Keep the surfaces clean, dry and free from oil/grease at all times.
5. Maintain the tool's labels and name plates. These carry important information. If unreadable or missing, contact Princess Auto Ltd. for replacements.

WARNING! Only qualified service personnel should repair the tool. An improperly repaired tool may present a hazard to the user and/or others.

DISPOSAL

Recycle a tool damaged beyond repair at the appropriate facility.

Contact your local municipality for a list of disposal facilities or by-laws for electronic devices, batteries, oil or other toxic liquids.

IMPORTANT! DO NOT pollute the environment by allowing uncontrolled discharge of waste oil.

HYDRAULIC FLUID

Do not drain hydraulic oil into the sewer system or dispose in an uncontrolled location. Hydraulic fluid may take more than a year to breakdown in the environment and the ingredients may still be toxic. Contact your local municipality for proper disposal instructions or locations.

SPECIFICATIONS

Capacity	10 gallon
Inlet Port Size	1-1/4 in. NPTF
Outlet Port Size	1-1/4 in. NPTF
Breather Cap Type	Push-on
Temperature/Level Gauge	Yes
Baffle	No
In-Tank Return	No
Construction	Aluminum
Mounting Type	Base flanges
Dimensions	11.5 x 16.5 x 16.5 in.