27 TON LOG SPLITTER

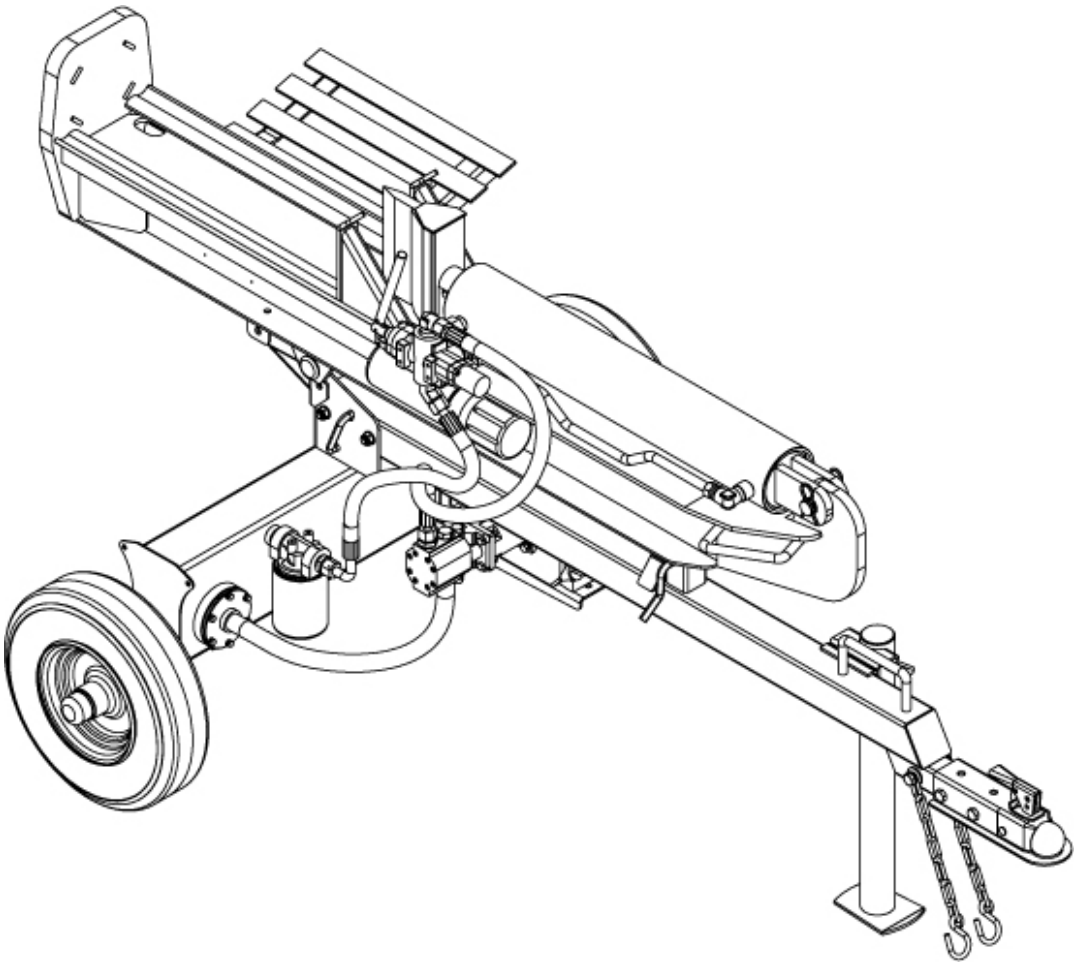

Owner's Manual

ASSEMBLY AND OPERATING INSTRUCTIONS

This safety alert symbol identifies important safety messages in this manual. Failure to understand and follow safety, assembly and operating instructions could result in serious injury or death.

RÉV07012024 LSP2700

Table of Contents

Important Safety Information..... 3-6
- Intended Use.....3
- Personal Protective Equipment..... 3
- Safety Decals.....3-4
- General Safety..... 5
- Work Area..... 5
- Preparing Logs for the Splitter..... 5
- Operation of the Log Splitter..... 5
- General Repair..... 5
- Maintenance Safety..... 6
- Fire Prevention..... 6
- Towing Safety..... 6

Assembly Instructions..... 7-11
Controls and Features Identification.....12
Operating Instructions..... 13-16
- Engine Oil Recommendations..... 13
- Starting Instructions..... 13
- Operation..... 13-14
- Towing..... 14
- Maintenance..... 15
- Splitter Positions..... 16

Troubleshooting.....17
Specifications..... 18
Drawing and Parts List..... 19-22
Limited Warranty..... 23

IMPORTANT SAFETY INFORMATION

WARNING: ***Read and understand all instructions and safety information in this manual and on safety decals before assembling or operating the log splitter. Failure to understand and follow all instructions and safety information may result in serious injury or death. Persons who have not read the manual should never operate the log splitter. A log splitter can be dangerous when assembled and/or used improperly. Do not operate the log splitter if you have any questions concerning safe operation. Please call the technical support department at 1-888-723-6534 for answers to any questions.***

WARNING: This product can expose you to chemicals including lead and lead compounds which are known to the State of California to cause cancer and birth defects or other reproductive harm. For more information, go to www.P65Warnings.ca.gov.

This is the safety alert symbol. It is used to alert you to potential personal injury hazards. Obey all safety messages that follow this symbol to avoid possible injury or death.

DANGER — **DANGER indicates a hazardous situation which, if not avoided, will result in serious injury or death.**

WARNING — **WARNING indicates a hazardous situation which, if not avoided, could result in serious injury or death.**

CAUTION — **CAUTION indicates a hazardous situation which, if not avoided, could result in minor or moderate injury.**

NOTICE — **NOTICE is used to address practices not related to personal injury.**

INTENDED USE

NEVER use the log splitter for any purposes other than splitting wood. The log splitter is designed **only** for splitting wood. Using the log splitter for any other purpose can result in serious injury or death and may void the warranty.

PERSONAL PROTECTIVE EQUIPMENT

BEFORE operating the log splitter always be sure to put on appropriate safety gear, including eye protection (goggles), steel-toed shoes and tight-fitting gloves (without loose cuffs or draw strings). Also, the use of proper hearing protection (headphones) is required when operating the log splitter.

SAFETY DECALS

ALWAYS check all safety warning decals are in good condition and readable. Immediately replace any missing or damaged decals. Please call 1-888-723-6534 to obtain replacement decals.

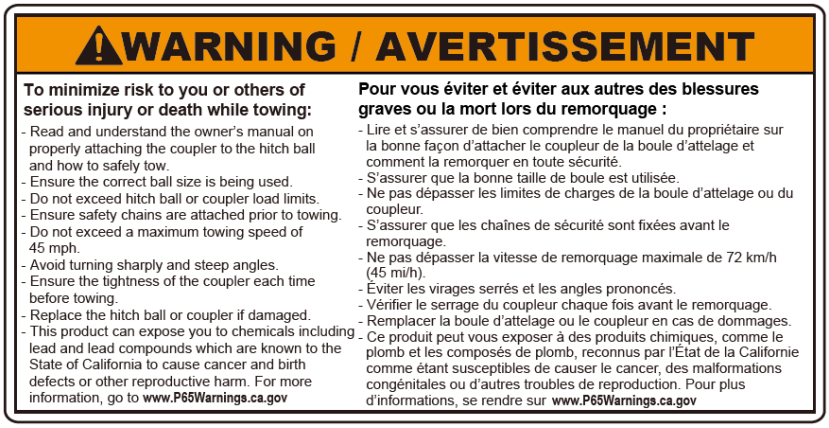

WARNING / AVERTISSEMENT

To minimize risk to you or others of serious injury or death while towing:

- Read and understand the owner's manual on properly attaching the coupler to the hitch ball and how to safely tow.
- Ensure the correct ball size is being used.
- Do not exceed hitch ball or coupler load limits.
- Ensure safety chains are attached prior to towing.
- Do not exceed a maximum towing speed of 45 mph.
- Avoid turning sharply and steep angles.
- Ensure the tightness of the coupler each time before towing.
- Replace the hitch ball or coupler if damaged.
- This product can expose you to chemicals including lead and lead compounds which are known to the State of California to cause cancer and birth defects or other reproductive harm. For more information, go to **www.P65Warnings.ca.gov**

Pour vous éviter et éviter aux autres des blessures graves ou la mort lors du remorquage :

- Lire et s'assurer de bien comprendre le manuel du propriétaire sur la bonne façon d'attacher le coupleur de la boule d'attelage et comment la remorquer en toute sécurité.
- S'assurer que la bonne taille de boule est utilisée.
- Ne pas dépasser les limites de charges de la boule d'attelage ou du coupleur.
- S'assurer que les chaînes de sécurité sont fixées avant le remorquage.
- Ne pas dépasser la vitesse de remorquage maximale de 72 km/h (45 mi/h).
- Éviter les virages serrés et les angles prononcés.
- Vérifier le serrage du coupleur chaque fois avant le remorquage.
- Remplacer la boule d'attelage ou le coupleur en cas de dommages.
- Ce produit peut vous exposer à des produits chimiques, comme le plomb et les composés de plomb, reconnus par l'État de la Californie comme étant susceptibles de causer le cancer, des malformations congénitales ou d'autres troubles de reproduction. Pour plus d'informations, se rendre sur **www.P65Warnings.ca.gov**

IMPORTANT SAFETY INFORMATION

OPERATOR SAFETY / SÉCURITÉ DE L'OPÉRATEUR

WARNING / AVERTISSEMENT

To minimize the risk of serious injury or death:
- Read and thoroughly understand owner's manual and engine manual before assembly, operation, towing and maintenance.
- Only one operator permitted. Only operate in the operator zone. Keep all bystanders and pets away.
- Do not step or reach over splitter during operation.
- Load logs by holding the log ends.
- Keep hands, body and clothing away from moving parts when splitting.
- Do not operate indoors.
- Do not check for high pressure oil leaks with your hands. Use cardboard to check for oil leaks.
- Wear safety glasses, shoes and hearing protection.
- Do not operate when tired or under the influence of alcohol or drugs.

Pour limiter les risques de blessures graves ou la mort :
- Lire et s'assurer de bien comprendre le manuel du propriétaire et le manuel du moteur avant l'assemblage, l'utilisation, le remorquage et l'entretien.
- Un seul opérateur est permis. Utiliser seulement dans la zone de l'opérateur. Éloigner toutes les personnes à proximité et les animaux.
- Ne pas monter ou ne pas tendre le bras au-dessus de la fendeuse de bûches pendant qu'elle fonctionne.
- Charger les bûches en tenant les extrémités de la bûche.
- Garder les mains, le corps et les vêtements à l'écart des pièces mobiles lors du fendage.
- Ne pas utiliser à l'intérieur.
- Ne pas vérifier la présence de fuites d'huile à haute pression avec les mains. Utiliser du carton pour vérifier les fuites d'huile.
- Porter des lunettes de protection, des chaussures de sécurité et un dispositif de protection anti-bruit.
- Ne jamais faire fonctionner une fendeuse de bûches lors d'état de fatigue ou sous l'effet de l'alcool, de la drogue ou des médicaments.

OPERATING INSTRUCTIONS / INSTRUCTIONS D'UTILISATION

1. Place splitter on dry, level surface. Remove debris from the work area.
2. Start engine. Advance throttle to max.
3. Place a log onto the beam against the foot plate.
4. Split wood in direction of grain.
5. Move control handle to EXTEND or RETRACT as necessary.

1. Placer la fendeuse de bûches sur une surface sèche et de niveau. Enlever les débris de la zone de travail.
2. Démarrer le moteur. Avancer le papillon des gaz à max.
3. Placer une bûche sur la poutre en l'appuyant contre la plaque de bout.
4. Fendre les bûches dans le sens des fibres.
5. Déplacer la poignée de commande à la position RÉTRACTER ou DÉPLOYER au besoin.

Control Valve / Soupape de commande

Retract / Rétracter

Extend / Déployer

For Operation and Service Questions Call
Pour toutes questions sur le fonctionnement ou le service,composer le
1-888-723-6534

NOTICE /AVIS

Do not thread in the dipstick when checking the hydraulic oil level. The oil level needs to be kept on the line below the "MAX" indicated on the dipstick. Never fill the tank above the "MAX" line.
Recommended oil viscosity is based on the outside operating temperatures in the table below.
Ne pas insérer la jauge d'huile lors de la vérification du niveau de l'huile hydraulique.
Le niveau d'huile doit être maintenu au niveau de la ligne sous la marque « MAX » indiquée sur la jauge d'huile.
Ne jamais remplir le réservoir au-dessus de la ligne « MAX ».
La viscosité de l'huile recommandée est établie en fonction des températures de fonctionnement à l'extérieur dans le tableau ci-dessous.

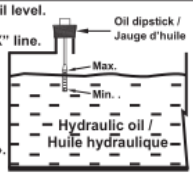

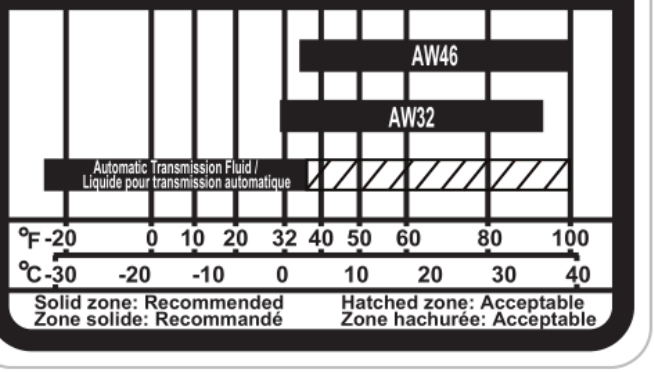

WARNING / AVERTISSEMENT

Before towing, check that beam latch pin is completely locked.
Avant le remorquage, vérifier si la goupille de verrouillage de la poutre est complètement verrouillée.

IMPORTANT SAFETY INFORMATION

GENERAL SAFETY

- **ALWAYS** keep the operator's manual in the canister for reference. Review the manual periodically and as questions arise.
- **ALWAYS** keep all bystanders and pets a minimum of 10 feet away from your work area when operating this log splitter. The operator alone should be near the log splitter during use.
- **NEVER** activate the control valve until all people are clear of the work area.
- **NEVER** wear loose clothing or jewelry when operating the log splitter. Keep clothing and hair away from all moving parts when operating the log splitter.
- **NEVER** allow adults without proper instruction and operational knowledge to use the log splitter.
- **NEVER** operate the log splitter when under the influence of drugs, alcohol or medication or when otherwise not alert enough to operate the log splitter.

WORK AREA

- **NEVER** operate the log splitter on wet, icy, slippery or unstable ground.
- **NEVER** operate the log splitter in an enclosed area. Exhaust fumes contain carbon monoxide which is deadly poison.
- **ONLY** operate the log splitter with adequate lighting.
- **ONLY** operate the log splitter on level ground. Operating on a slope may cause the log splitter to move and/or logs to fall off the log splitter.
- **ALWAYS** keep the work area free of debris. Remove any split wood around the log splitter immediately to avoid tripping.

PREPARING LOGS FOR THE SPLITTER

Log ends should be cut as squarely as possible before placing logs on the log splitter. The square shape of the log helps prevent the logs from moving during splitter operation. The maximum log length is 26 inches.

OPERATION OF THE LOG SPLITTER

ONLY operate the log splitter from the operator zone as shown in the diagram. Operating the log splitter outside the operator zone can result in serious injury or death.

- **ALWAYS** chock the wheels to prevent movement of the log splitter while in operation.
- **KNOW** how to stop the log splitter and disengage the controls before operating it.
- **NEVER** try to split a log against the grain.
- **NEVER** try to split two logs at the same time.
- **NEVER** step over the log splitter during operation.
- **NEVER** reach or bend over the log splitter to pick up a log.
- **NEVER** attempt to load the log splitter when the wedge is in motion.
- **NEVER** place hands or feet between the log and splitting wedge during forward or reverse stroke as this could result in serious injury or death.
- **NEVER** use your foot, a rope or any extension device to operate the control lever on the valve. Only use hands to operate control levers.
- **NEVER** touch the muffler and other hot areas of the engine. Allow time for the engine to cool down before touching.
- **NEVER** move the log splitter while the engine is running. Turn off the engine before leaving the log splitter.
- **NEVER** leave the log splitter running unattended, even for a short period of time.

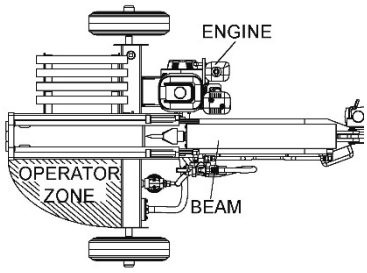

HORIZONTAL POSITION

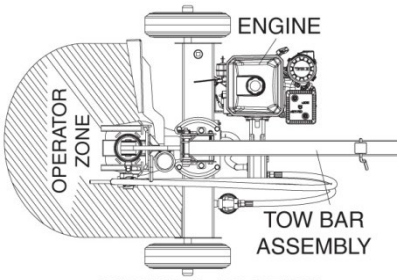

VERTICAL POSITION

GENERAL REPAIR

- **NEVER** operate the log splitter if it is in poor mechanical condition or in need of repairs.
- **NEVER** alter/modify the log splitter in any way. Any alterations/modifications may make the log splitter unsafe and voids the warranty.
- **NEVER** perform any service or repair on the log splitter without first removing the spark plug wire.
- **NEVER** tamper with the engine settings. The maximum engine speed is preset by the manufacturer and is within safety limits. Refer to the engine owner's manual for the particular log splitter.
- **ALWAYS** perform all recommended maintenance procedures before using the log splitter.
- **ALWAYS** check the level of hydraulic oil and engine oil before operating the log splitter.
- **NEVER** use hands to remove a stuck log while the log splitter is running.
- **ALWAYS** replace all damaged or worn parts immediately.

- **ALWAYS** check regularly that all nuts, bolts, screws, hydraulic fittings and hose clamps are tight.
- **ALWAYS** be sure any and all replacement parts meet the manufacturer's specifications.

MAINTENANCE AND SAFETY

- The mechanical and hydraulic systems of the log splitter require careful inspection. Be sure to replace damaged hydraulic hoses and components.
- **NEVER** check for leaks of hydraulic fluid by using your hands. Leaking hydraulic fluid under pressure can potentially penetrate the skin causing SERIOUS INJURY or even DEATH. Leaks can be safely detected by holding a piece of cardboard over the suspected leak and looking for discoloration.
- **NEVER** remove the cap from the hydraulic tank while the log splitter is running. The tank contains hot oil under pressure which could cause serious injury if released from the tank.
- **NEVER** adjust the relief valve setting. The pressure relief valve on the log splitter is preset at the factory. Only a qualified service technician should perform any adjustments.
- **ALWAYS** immediately seek medical attention if injured by escaping hydraulic fluid. Serious infections or reactions can develop if proper medical treatment is not administered immediately.
- **ALWAYS** check the system is not under any pressure by shutting off the engine and moving the valve control handle back and forth. Check for pressure before loosening or removing any hydraulic fitting.

FIRE PREVENTION

- **ONLY** refuel the log splitter in clear areas with no gas fumes and no spilled gas.
- **NEVER** operate the log splitter near flames, sparks or smoke. Hydraulic oil and gasoline are flammable and potentially explosive.
- **NEVER** add fuel while the engine is hot or running. Allow the engine to cool completely before refueling.
- If gasoline spills, move the log splitter away from the area of the spill and avoid creating any source of ignition.
- **ALWAYS** securely replace the gas cap.
- **ALWAYS** clean wood debris from the muffler area of the engine.
- **ALWAYS** store gasoline in an appropriate, tightly sealed container. Store the gas container in a cool, dry place and away from any heat sources.

IMPORTANT NOTE RE: SPEAK ARRESTER-REGULATION:

As a precautionary measure against possible flying sparks, always have a Class B fire extinguisher on hand when operating the log splitter in dry areas. The log splitter is equipped with an internal combustion engine that generates heat and potential flying sparks. Only use the log splitter on or near any unimproved, forest-covered, brush-covered or grass-covered land if the engine's exhaust system is equipped with a spark arrester in compliance with any applicable local or state laws. Spark arresters should be effectively maintained and serviced. In the state of California, a spark arrester is required by law and other states have similar laws. Federal laws will apply when operating the log splitter on federal land. Always research and comply with applicable state, local and federal laws and regulations. A spark arrester muffler is optional and available as an accessory at your nearest engine dealer.

TOWING SAFETY

- **NEVER** carry cargo or wood on the log splitter.
- **NEVER** allow anyone to sit or ride on the log splitter.
- **NEVER** move the log splitter over hilly or uneven terrain without a tow vehicle and/or adequate help.
- **NEVER** exceed weight capacity of ball or load limits of coupler.
- **NEVER** exceed speeds of 45 mph when towing the log splitter. Towing the log splitter at speeds higher than 45 mph could result in loss of control, damage to the equipment, and/or serious injury or death. Adjust towing speeds for the terrain and conditions. Utilize extra caution when towing over rough terrain. Avoid sharp turns and steep angles when towing the log splitter.
- **ALWAYS** attach safety chains when towing the log splitter.
- **ALWAYS** confirm coupler tightness every time before towing and after towing 50 miles.
- **ALWAYS** use caution when backing up with the log splitter in tow as it could jackknife.
- **ALWAYS** accommodate for the added length of the log splitter when turning, parking, crossing intersections and always when driving while towing the log splitter.
- **ALWAYS** disconnect the log splitter from the towing vehicle before operating.
- **ALWAYS** know and comply with all local and state regulations governing towing, licensing, and lights before towing the log splitter.
- **ALWAYS** check before towing that the log splitter is correctly and securely attached to the towing vehicle and that the safety chains are secured to the hitch or bumper of the vehicle with enough slack to allow for turning. Always use a Class I or above; 2" ball for connecting to the log splitter.
- **ALWAYS** replace damaged ball couplers.
- **ALWAYS** turn the fuel shut off valve on the engine to the "OFF" position before towing the log splitter. Failure to turn off the engine before towing may flood the engine and damage engine oil.

ASSEMBLY INSTRUCTIONS

TOOLS REQUIRED

- Screw Driver
- Hammer
- Band Cutter
- 13mm, 17mm and 19mm Wrenches
- Large Adjustable Wrench

STEP 1: Attach the Wheel

1.1 Remove the nuts (73) and bolts (58) from the wheel axle.

1.2 Insert the wheel into the wheel axle of the hydraulic reservoir, secure with the previously removed nuts and bolts using two 17mm wrenches.

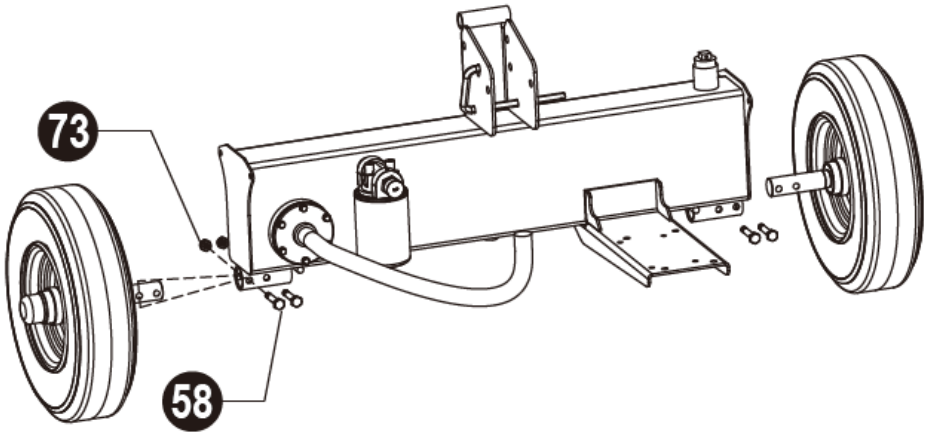

STEP 2: Attach Tow Bar to the Hydraulic Reservoir

2.1 Attach the tow bar assembly to the hydraulic reservoir and secure using M12x100 hex bolts (23), Ø12 flat washers (63) and M12 nylon lock nuts (12) using two 19mm wrenches.

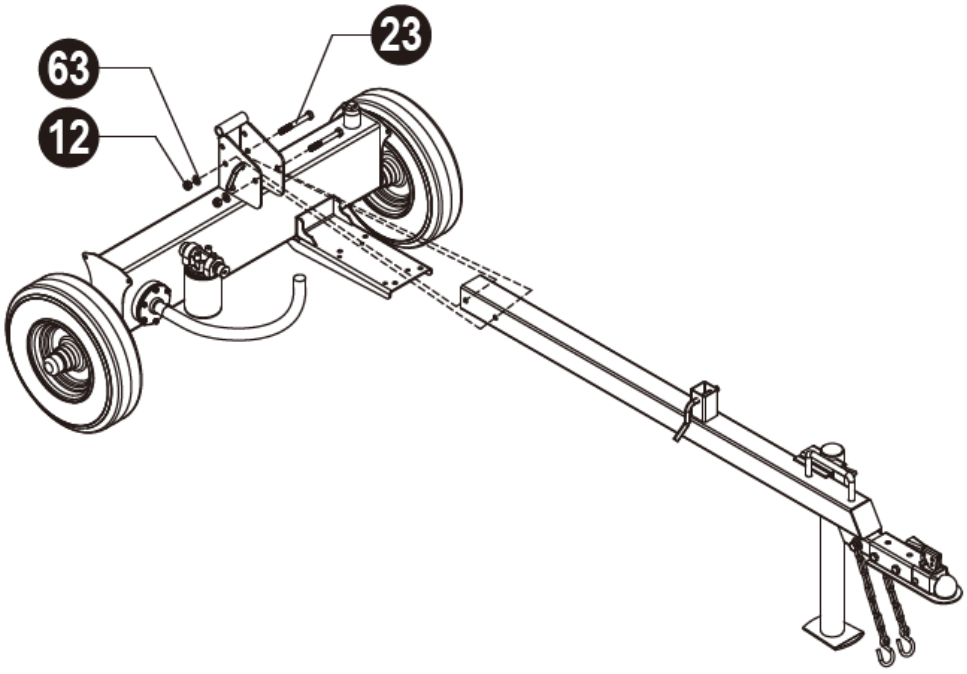

STEP 3: Attach the Beam Assembly

3.1 Remove the hitch pin (17) and R-Clip-pin (20) from the beam.
3.2 Connect the beam and the hydraulic reservoir using the large hitch pin (17) and the R-Clip-pin (20).

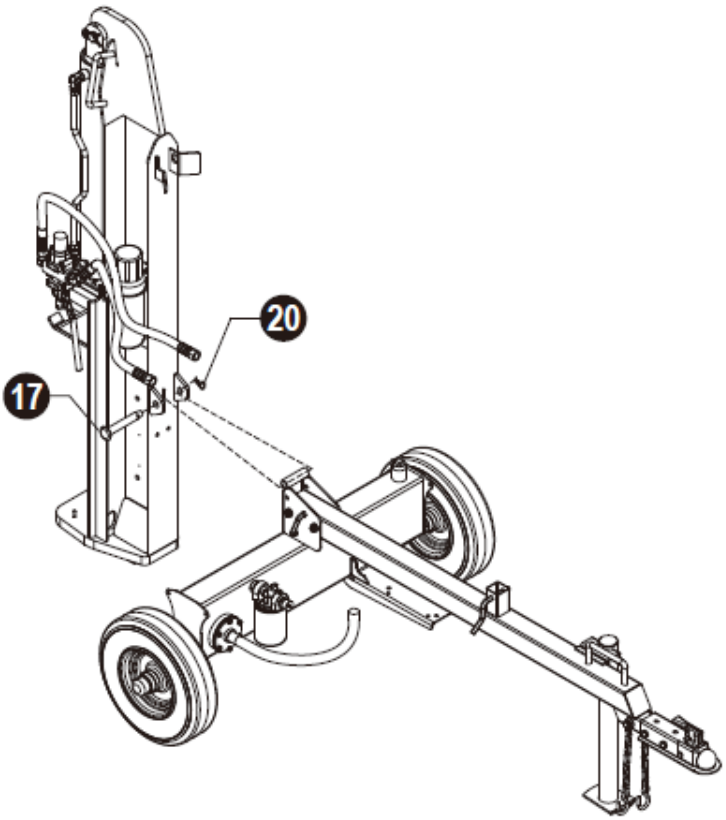

STEP 4: Attach the Engine and Oil Pipe

4.1 Put the engine on the mounting plate tighten with M8x40 hex bolts (44), Ø8 flat washers (34), Ø8 lock washers (31) and M8 nylon lock nuts (77) using two 13mm wrenches.
4.2 Attach the clear oil pipe (51) to the bottom of the gear pump and secure with clamp (49).

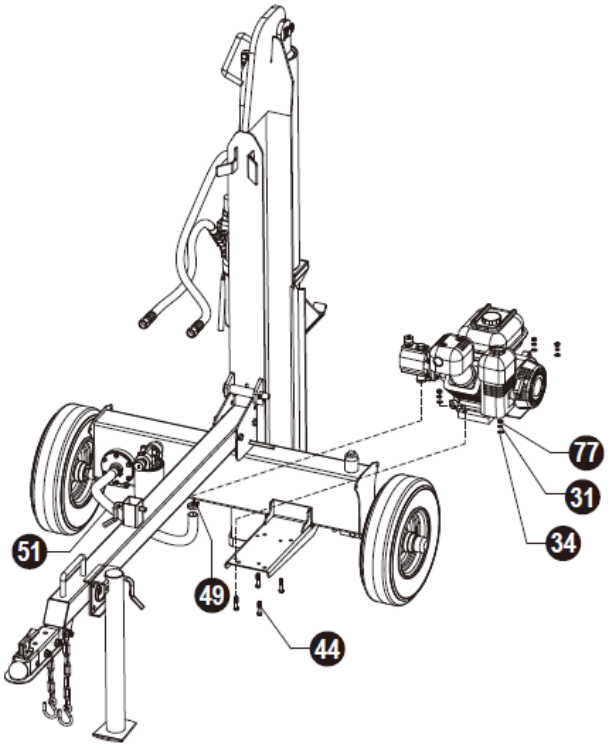

STEP 5: Attach Hydraulic Hose

5.1 Remove the connector and the hose plugs. Both plugs may be discarded.

5.2 Attach the hydraulic hoses (6 and 15) to the filter assembly and the pump.

The Ø11x2.5 O-Ring (18) and Ø17x2.5 O-Ring (69) are preassembled in the connector.

Keep O-Rings in place during assembly.

A small amount of oil may come out of the hoses when the caps are removed. To prevent oil dripping on the ground, use a small pail to catch any oil.

Each connection requires only one O-Ring. Both the hose and the fitting sides have O-Rings so remove one O-Ring before installing the hoses. Save the extra O-Ring for possible future use/repair.

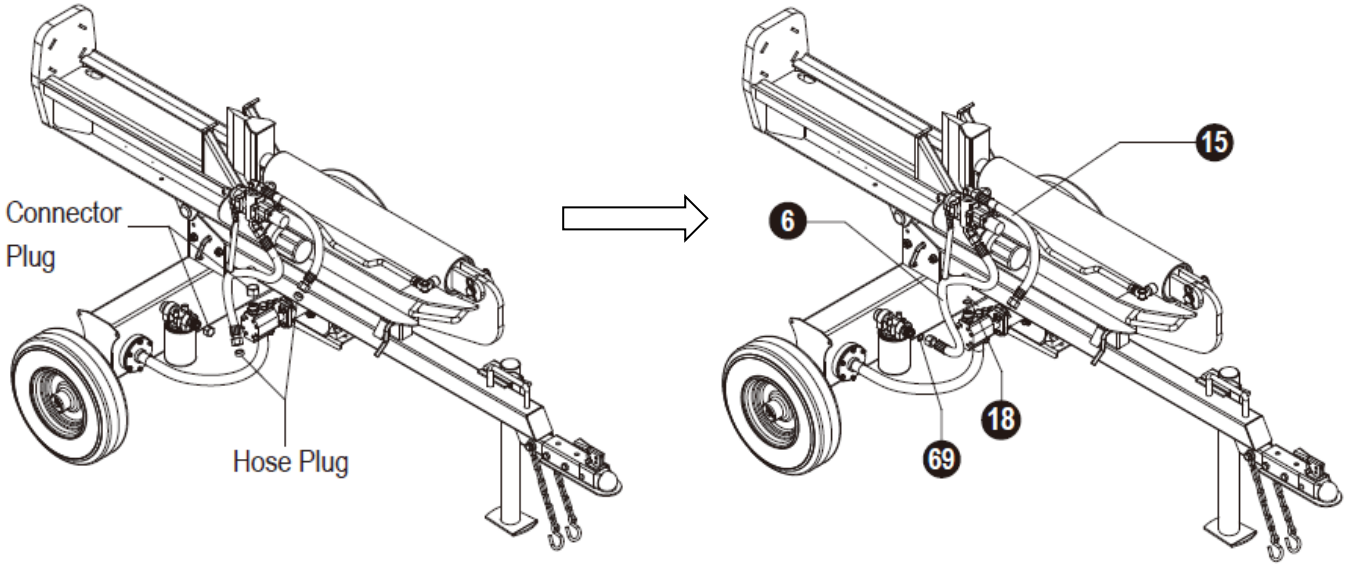

STEP 6: Attach Control Lever

6.1 Remove the spring cotter pin and the retaining pin from the control valve. Rotate the control lever to the vertical position and secure with the retaining pin and the spring cotter pin.

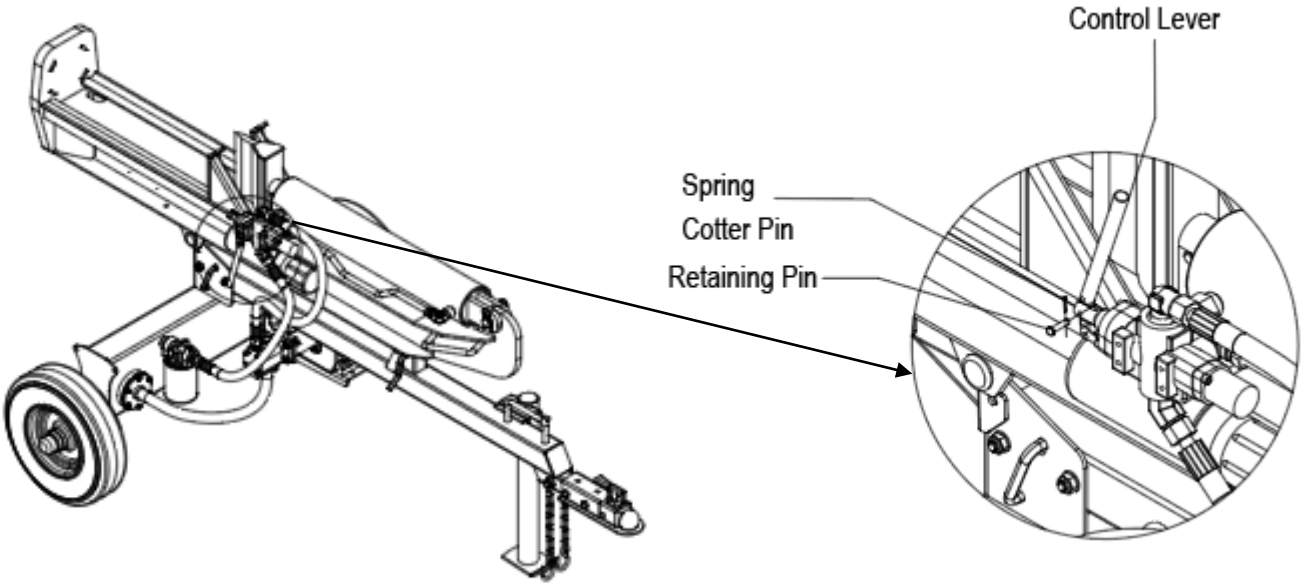

STEP 7: Attach the Log Cradle

7.1 Take out the hardware from manual canister to attach the log cradle (59) to the beam. Attach the log cradle (59) to the beam with the Ø12 flat washer (63) and the M12 nylon lock nut (12) using a 19mm wrench.

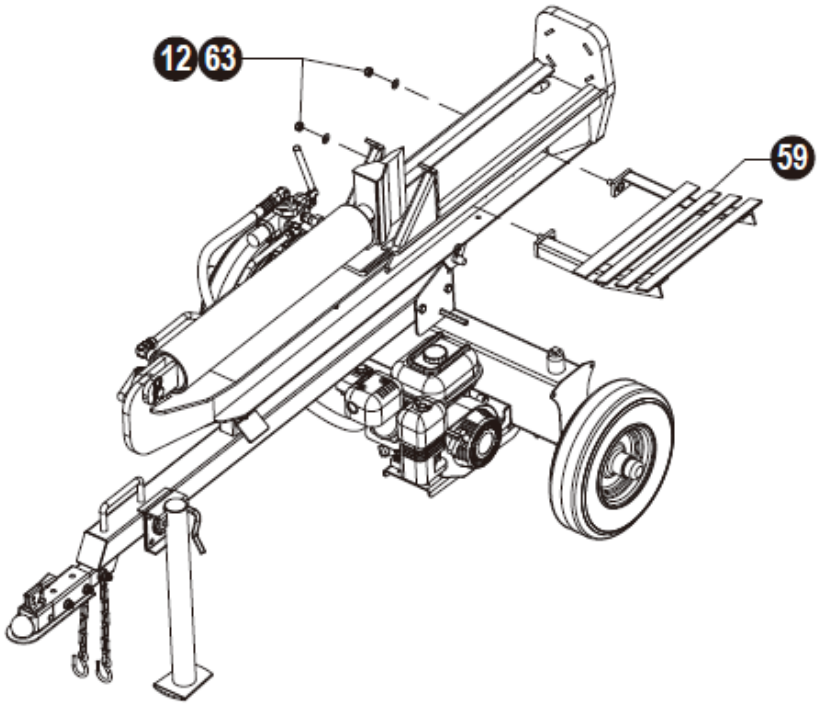

STEP 8: Add Engine Oil

8.1 Make sure the log splitter is on a level surface.

8.2 Remove the oil fill cap/dipstick to check the oil level.

8.3 Refer to the separate owner's engine manual to determine the necessary quantity of engine oil; add engine oil to the proper level and replace the oil fill cap/dipstick.

8.4 Check the engine oil level daily and add oil as necessary to maintain the proper level.

NOTICE: During the break-in period check the engine oil level often. When initially using the log splitter the operator should check the engine oil level frequently to ensure proper function.

DO NOT attempt to crank or start the engine before it has been properly filled with the recommended type and amount of engine oil. Damage to the log splitter resulting from a failure to follow these instructions will void the warranty.

STEP 9: Add Hydraulic Oil

9.1 The log splitter needs to be on a flat level surface before checking or adding the hydraulic oil.

9.2 Remove the oil cap from the hydraulic oil tank.

9.3 Add 3.7 gallons hydraulic oil, AW32, AW46 and universal hydraulic oil are other acceptable types.

9.4 Start the engine and use the control lever to extend and retract the wedge several times to remove air from the lines.

9.5 With the wedge retracted, check the hydraulic oil level again and fill if necessary.

9.6 To enhance engine start up, **automatic transmission fluid can be used when operating in temperatures below 32 degrees.**

WARNING

DO NOT remove the hydraulic oil fill cap when the engine is running or hot. Hot oil can escape causing severe burns. Always allow the log splitter to cool completely before removing the hydraulic oil cap.
High fluid pressure and temperatures are created inside hydraulic log splitters. Hydraulic fluid can escape through a pin-size hole and can puncture skin and cause severe blood poisoning.
Inspect hydraulic systems regularly for possible leaks. **Never check for leaks with your hand while the system is pressurized. Seek medical attention immediately if injured by leaking fluid.**
Make sure all fittings are tight and secure before applying pressure. Relieve system pressure before servicing.
Make sure the hydraulic hoses do not touch any hot surfaces or cutting areas.
Hoses need to be positioned away from the engine and cutting wedge. To avoid serious bodily injury always inspect the hoses before operating the log splitter.

STEP 10: Add Gasoline to the Engine

10.1 Use only clean, fresh, regular unleaded fuel with a minimum 87 octane rating.

10.2 DO NOT mix oil with fuel.

10.3 Remove the fuel cap and slowly add fuel to the tank. DO NOT overfill and allow for approximately a ¼ inch of space for fuel expansion.

10.4 Tightly screw on the fuel cap and clean/wipe away any spilled fuel.

DANGER

Log splitter engine exhaust contains carbon monoxide, a colorless, odorless, poison gas. Breathing carbon monoxide may cause nausea, dizziness, fainting or death. If you start to feel dizzy or weak, immediately cease operation and get to fresh air and seek medical attention.
Log splitters should be operated only outdoors and in well-ventilated areas.
DO NOT operate the log splitter inside any building, enclosure or compartment.
DO NOT allow exhaust fumes to enter a confined area through windows, doors, vents or other openings.
DANGER CARBON MONOXIDE, using a log splitter indoors **CAN KILL YOU IN MINUTES.**

CAUTION

Fuel and fuel vapors are highly flammable and extremely explosive.
Fire or explosion can cause severe burns or death.
Unintentional startup can result in entanglement, traumatic amputation or laceration.
Only use regular unleaded gasoline with a minimum 87 octane rating.
DO NOT mix oil and gasoline together.
Fill tank approximately ¼” below the top of the tank to allow for fuel expansion.
DO NOT fill fuel tank indoors or when the engine is running or hot.
DO NOT light cigarettes or smoke when filling the fuel tank.

CONTROLS AND FEATURES IDENTIFICATION

The diagram below identifies the major components and features of the log splitter described in this manual.

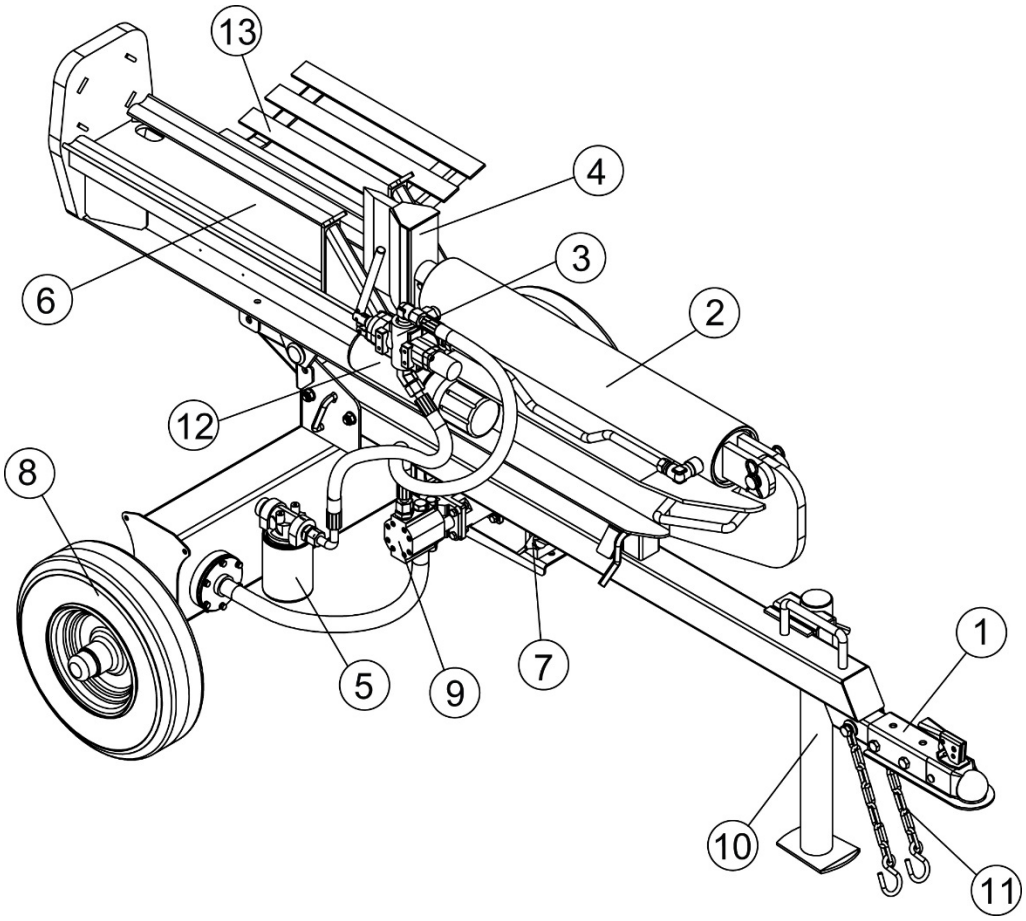

1) **2” Ball Coupler**
2) **Hydraulic Cylinder**
3) **Control Valve**
4) **8” Wedge**
5) **External Filter**
6) **Beam**
7) **Engine**
8) **Tire / Wheel Assembly**
9) **Gear Pump**
10) **Support Leg**
11) **Safety Chains**
12) **Manual Canister**
13) **Log Cradle**

OPERATING INSTRUCTIONS

WARNING: ***Read and understand all instructions and safety information in this manual and on safety decals before assembling or operating the log splitter. Failure to understand instructions and safety information could result in serious injury or death. Do not allow anyone to operate the log splitter who has not read this manual. A log splitter can be dangerous if assembled or used improperly. Do not operate this log splitter if you have any questions concerning safe operation. Call our technical support department at 1-888-723-6534 for answers to any questions.***

CAUTION: DO NOT START/ RUN THE ENGINE BEFORE CHECKING THE OIL IN THE HYDRAULIC RESERVOIR AND THE OIL IN THE ENGINE.

ENGINE OIL RECOMMENDATIONS

The engine comes with 10W-30 oil. Refer to the engine owner's manual for information regarding proper oil temperature ranges and grades to use. Engine oil capacity is 20.3 ounces.

After the hydraulic reservoir and the engine crankcase are filled with oil, start the engine. The hydraulic pump should prime itself. With the engine running, move the control valve lever toward the foot plate. This will cause the cylinder to extend and expel air. When the cylinder is fully extended, retract it. Repeat this procedure several times. After this procedure check oil level again. If the tank is overfilled it tends to expel oil from the breather cap when the cylinder is retracted. Cycle the cylinder again until it maintains a constant speed which indicates all the air has been expelled from the cylinder.

STARTING INSTRUCTIONS

Refer to the Kohler Owner's manual for complete information on starting, maintenance and specifications.

196cc Kohler Engine

a) Check that "ON"/"OFF" switch is in the "ON" position.
b) Move the throttle lever to "FAST". Always operate the engine with throttle lever in the "FAST" position.
c) Move choke control lever to "CHOKE" position.
d) Grasp rope handle and pull slowly to the point of resistance. Once resistance is felt pull rapidly to start the engine and to avoid engine kickback.
e) After allowing the engine to warm up, move the choke control lever slowly toward "RUN". In cold weather give the engine extra time to warm up before slowly moving the choke lever toward "RUN". Operate with the choke lever in the "RUN" position.
f) To stop engine, move the "ON"/"OFF" switch to the "OFF" position.

CAUTION: TURN FUEL SHUT OFF VALVE TO THE "OFF" POSITION BEFORE TOWING.FAILURE TO DO SO MAY RESULT IN FLOODING THE ENGINE AND DESTROYING ENGINE OIL.

NOTE: The engine maximum governed speed is preset at the factory at 3850±1 RPM load speed. When splitting wood, the throttle should be set at the maximum speed in order to generate the horsepower required for the pump.

OPERATION

WARNING: Review safety information related to operation of the log splitter on page 5 and 6 of this manual. Make sure that you have the recommended personal protective equipment described on page 3.

1) Set up the log splitter in a clear, level area and chock the wheels.

2) For horizontal operation, place a log on the beam against the foot plate. Make sure the log is securely on the foot plate and up against the beam. To split wood in the vertical position, release the pin on the beam latch located near the front end of the beam. Tilt the beam up until the foot plate is sitting squarely on the ground and the log splitter is stable. Place the log on the foot plate up against the beam. When the beam is returned to the horizontal position make sure the beam latch pin is secure.

3) Move control valve handle so that the cylinder will drive the wedge into the log. Extend the cylinder until the log splits or until it reaches the end of its stroke. If the log has not completely split after the cylinder has reached the end of its extension, retract the cylinder.

IMPORTANT: Leaving the valve in the “actuate” position at the end of the stroke can accelerate wear on the hydraulic component. Do not split logs with unsquared ends.

NOTE: For operation in wooded areas, obtain a spark arrestor for the exhaust system. Consult the engine operating and maintenance manual and check with your authorized Kohler service center. Also see Fire Prevention on page 6 of this manual.

TOWING

Installation Instructions

1. Remove the bolt and nut from the 2” coupler.

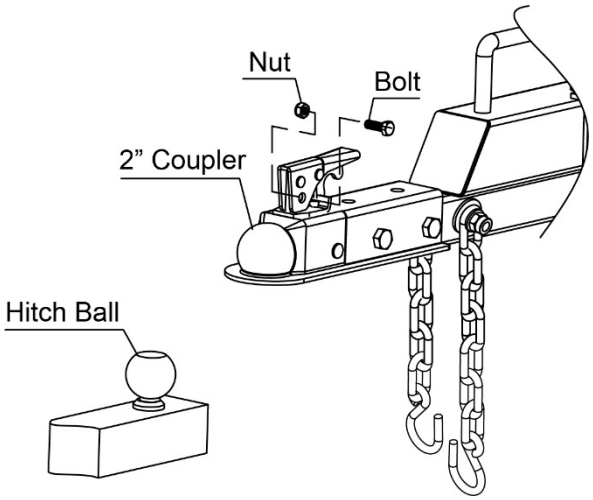

2. Flip up the snap clip and handle of the coupler.

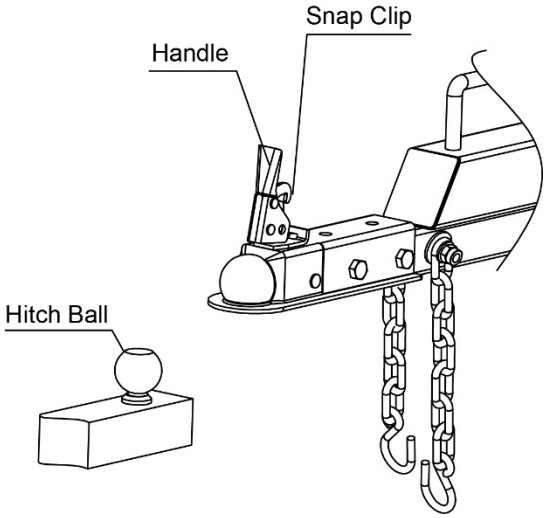

3. Put the coupler on the hitch ball, need to put it all in. Figure 1 is correct, while Figure 2 is incorrect as it was not installed in place.

4. Press down the handle of the coupler, check whether the coupler is in place, then reinstall the bolt and nut. Attach the chain hook to the tractor.

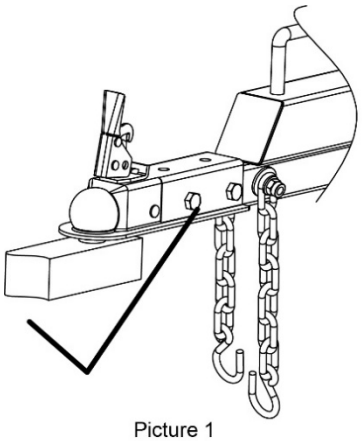

Picture 1

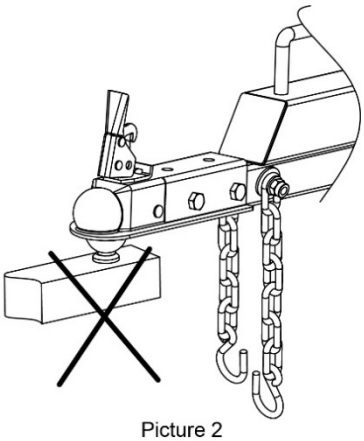

Picture 2

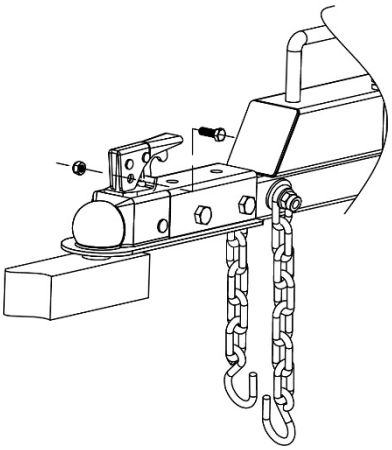

The log splitter is equipped with pneumatic tires, a Class I or above coupler (2 in. diameter ball required) and safety chains. Before towing, the safety chains must be secured to the hitch or bumper of the vehicle. Local regulations should be checked regarding licensing, lights, towing, etc. Before towing, turn the fuel shut off valve on the engine to the “OFF” position. Failure to turn off the engine before towing may flood the engine. Do not exceed 45 mph when towing the log splitter. Also see Towing Safety on page 6 of this manual.

MAINTENANCE

1) Consult the operating and maintenance instructions of the engine's manufacturer for engine care and maintenance.

2) Always check the oil level of the hydraulic reservoir before operation. Operating the log splitter without an adequate oil supply will cause severe damage to the pump.

3) Change the oil filter after the first 25 hours of operation. After the initial 25 hours, the oil filter should be changed seasonally or every 100 hours.

4) To drain the hydraulic oil, remove the drain plug from the bottom of the tank. The drain plug is located just to the right of the oil filter.

5) If the wedge needs to be sharpened, it can be removed and sharpened.

6) Clean the breather cap after every 25 hours of operation. When operating in dusty conditions the breather cap should be cleaned more frequently. To clean, first remove the breather cap from the tank, then flush with solvent and blow out the cap with air.

7) Also see General Repair and Maintenance Safety on page 5 and 6 of this manual.

8) All replacement parts must meet manufacturer's specifications.

OPERATING INSTRUCTIONS

HORIZONTAL POSITION

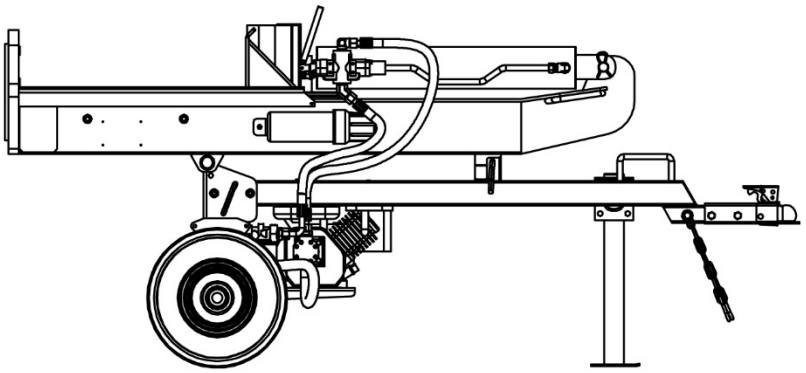

VERTICAL POSITION

1. Pull beam lock pin.
2. Rotate the beam to the upright position by lifting the beam.

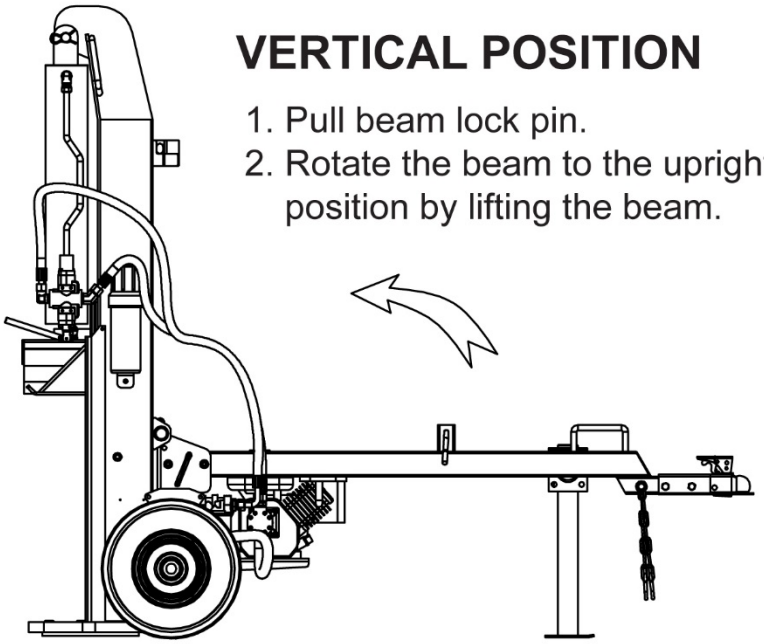

Upright position for splitting large logs.

FOR VEHICLE TOWING

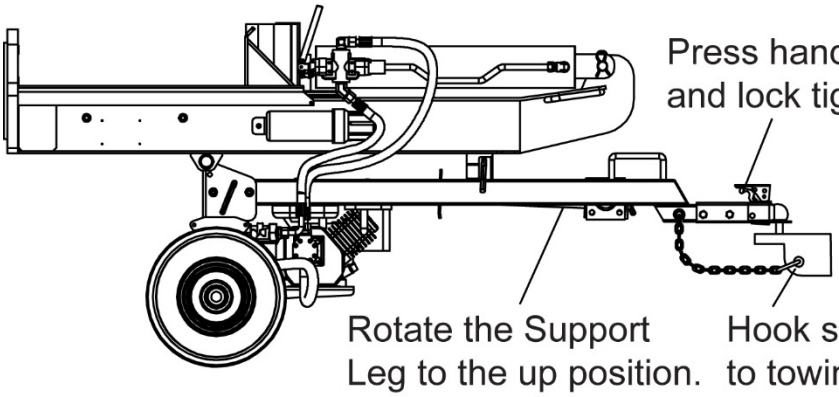

Press handle down and lock tightly.

Rotate the Support Leg to the up position.

Hook safety chains to towing vehicle.

TROUBLESHOOTING

Problem	Cause	Solution
Engine will not start	Engine switch in “OFF” position	Move switch to “ON” position
	Fuel shut-off valve in “OFF” position	Move valve to “ON” position
	No fuel	Add fuel
	Faulty spark plug	Replace the spark plug
	Spark plug is disconnected	Connect the spark plug
	Unit is loaded during start up	Move valve handle back and forth, remove load
Engine shuts off during operation	Out of fuel	Fill the fuel tank
	Low oil level	Fill the crankcase to the proper oil level
Wedge movement is slow or erratic	Air in the hydraulic oil system	Purge air by extending and retracting the wedge several time until motion is smooth
	Debris lodged in beam guides	Clear debris from beam
	Low hydraulic oil	Check oil level and add as needed
Wedge will not extend or retract	Faulty control valve	Contact customer service
	Faulty hydraulic pump	Contact customer service
	Low hydraulic oil	Check oil level and add as needed
Wedge does not auto-return	Low hydraulic oil	Check oil level and add as needed
	Faulty control valve	Contact customer service
Excessive bouncing while towing	Under-inflated tires	Inflate tires to proper pressure level

For further technical support please contact:

YTL International Inc.
17517 Fabrica Way Suite H
Cerritos, CA 90703
Phone: (888) 723-6534
Email: parts@ytlinternational.com
Website: www.ytlinternational.com

For service, please contact:
Warranty & Customer Support Questions
Toll Free: (888) 723-6534

SPECIFICATIONS

Maximum Splitting Force.....27 Tons

Cycle Time ..... 14 Seconds

(Note: Cycle time may vary given mechanical and environmental factors; the published cycle time is for ideal conditions)

Wedge Height ..... 8” Hardened Steel

Gear Pump .....14 GPM, 2-Stage

Hydraulic Oil ..... AW32, AW46 and Universal Hydraulic Oil

Hydraulic Capacity .....6.5 Gallons

Maximum Log Length .....26”

Hydraulic Cylinder.....$4^3/_8$” x $24^1/_2$”

Maximum Pressure 3712PSI

Wheel Size..... 4.8-8 wheel with 16” outside diameter D.O.T tires

Hitch Type..... 2” Ball Coupler

Maximum Towing Speed ..... 45 MPH

Manual Start Engine 196cc

NOTE: For Engine Details Refer to the Engine Owner’s Manual.

DRAWING AND PARTS LIST

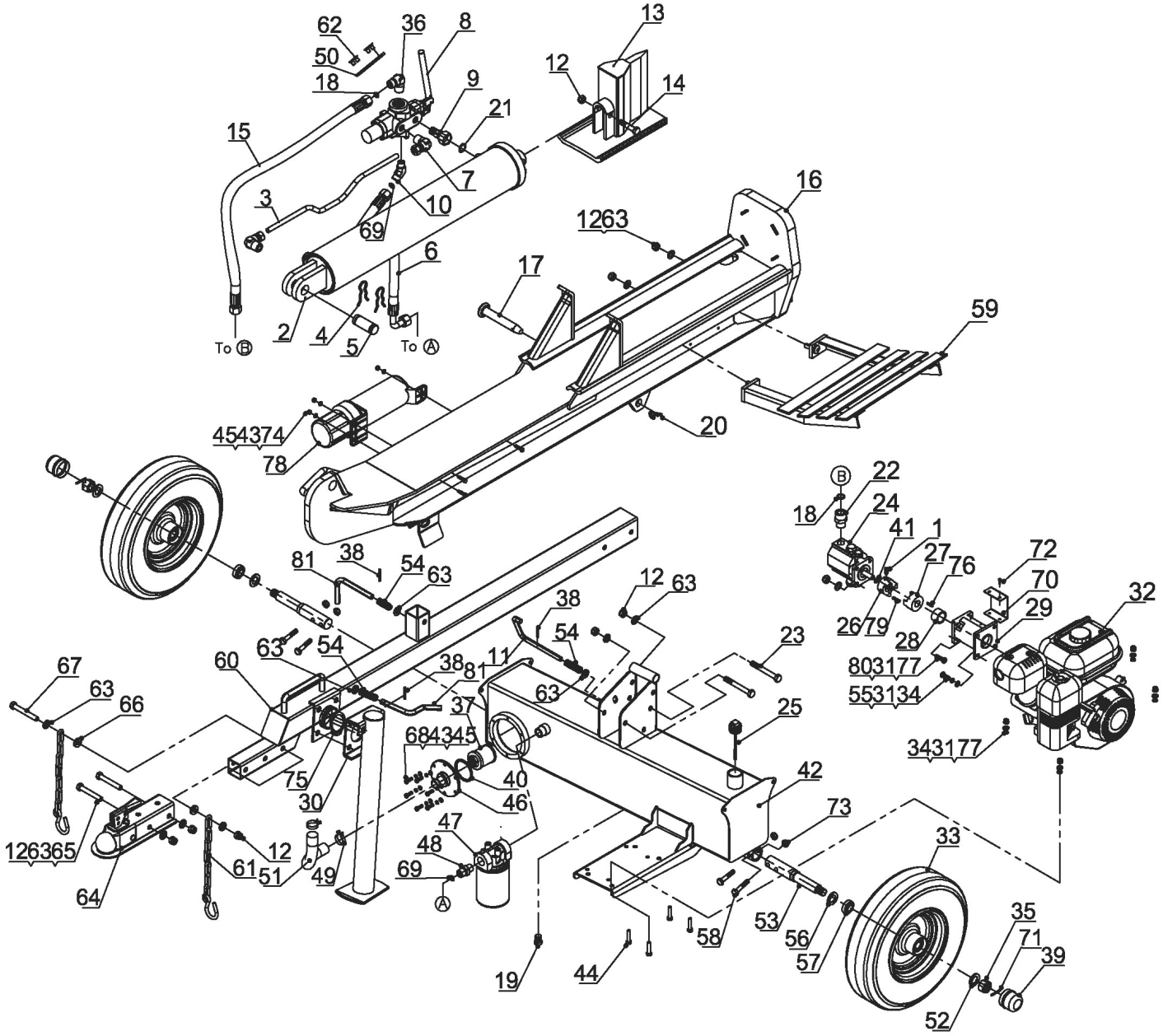

DRAWING AND PARTS LIST

Ref#	Drawing No.	Description	Qty.
1	9121-06010-FH	M6x10 Inner Hex Cone Point Set Screw	1
2	LSP2700-08000	Cylinder	1
3	LSP25-00001-DX	Metal Tube	1
4	LSP25-00005-DX	R Pin	2
5	LSP25-00004-DX	Cylinder Pin	1
6	LSP25-00017	Hydraulic Hose (valve- external filter)	1
7	LSP25-06000	Connector	2
8	LSM30-05000	Control Valve	1
9	LSP25-17000	Combination Connector	1
10	LSP25-00002-DX	130°Joint	1
11	LSP25-00006-DX	Safety Pin	1
12	9206-12000-DX	M12 Nylon Lock Nut	8
13	LSP25B-02000	Wedge	1
14	9101-12065-DX8.8	M12x65 Hex Bolt	1
15	LSP25-00016	Hydraulic Hose (valve- gear pump)	1
16	LSP2700-01000	Beam	1
17	LSP3700-00001-DX	Hitch Pin	1
18	9901-11*2.5	Ø11x2.5 O Ring	2
19	LSP25-00010-DX	Oil Plug	1
20	LSP25-00012-DX	R Pin	1
21	9901-15*2.5	Ø15x2.5 O Ring	1
22	LSP25-00014-DX	Gear Pump Connector	1
23	9101-12100-DX8.8	M12x100 Hex Bolt	2
24	LSP30-10001	Gear Pump 13/1.8	1
25	LSP25-13000	Metal Plug / Dipstick	1
26	LSP25-10003	Gear Pump Coupling	1
27	LSP25-10002	Engine Coupling	1
28	LSP25-10004-DX	Engine Axle Sleeve	1
29	LSP25-10005	Gear Pump Stand	1
30	LSP30-07000	Front Support Leg Assembly	1
31	9306-08000-DX	Ø8 Lock Washer	12
32	LSP25-10001	Engine	1
33	LSP25-14000	Wheel Assembly	2
34	9301-08000-DX	Ø8 Flat Washer	8
35	LSP25-00020-FH	M20x1.5 Hex Slotted Thin Nut	2
36	LSP25-00019-DX	Angle Connector	1
37	LSP25-00022-DX	Oil Filter	1

DRAWING AND PARTS LIST

Ref#	Drawing No.	Description	Qty.
38	9404-03030-DX	Ø3x30 Cotter Pin	3
39	LSP25-00009-DX	Axle Cap	2
40	LSP25-00021	Rubber Washer	1
41	LSP25-10008-FH	Steel Wire Snap Ring for Shaft	1
42	LSP2700-02000	Hydraulic Reservoir	1
43	9301-06000-DX	Ø6 Flat Washer	9
44	9101-08040-DX8.8	M8x40 Hex Bolt	4
45	9101-06020-DX8.8	M6x20 Hex Bolt	9
46	LSP25-15000-DX	Filter Mounting Plate	1
47	LSP25-09000	Spin-on Filter	1
48	LSP25-00007-DX	Connector	1
49	LSP25-00011-DG	Clamp	2
50	LSP2700-00005	Plate	1
51	LSP3200-00011	Clear Oil Pipe	1
52	9301-20000-DX	Ø20 Flat Washer	2
53	LSP3700-00003-FH	Wheel Axle	2
54	LSP25-00003-DX	Spring	3
55	9101-08025-DX8.8	M8x25 Hex Bolt	4
56	LSP25-14002	Oil Seal	2
57	L44643	Tapered Roller Bearing	4
58	9101-10055-DX8.8	M10x55 Hex Bolt	4
59	LSP25-12100	Log Cradle	1
60	LSP2700-03000	Tow Bar Assembly	1
61	LSP25-11000-DX	Chain	2
62	9110-08010-DX	M8x10 Screw	2
63	9301-12000-DX	Ø12 Flat Washer	11
64	Z103	2” Coupler	1
65	9101-12080-DX8.8	M12x80 Hex Bolt	2
66	LSP25-00015-DX	Thick Washer	2
67	9101-12090-DX8.8	M12x90 Hex Bolt	1
68	9306-06000-DX	Ø6 Lock Washer	6
69	9901-17*2.5	Ø17x2.5 O Ring	2
70	LSP25-10006	Coupling Guard	1
71	9404-04036-DX	Ø4x36 Cotter Pin	2
72	9101-05010-DX8.8	M5x10 Hex Bolt	4
73	9206-10000-DX	M10 Nylon Lock Nut	4

DRAWING AND PARTS LIST

Ref#	Drawing No.	Description	Qty.
74	9206-06000-DX	M6 Nylon Lock Nut	3
75	9304-62000-FH	Steel Wire Snap Ring for Shaft	1
76	LSP25-10010	Engine Flat Key	1
77	9206-08000-DX	M8 Nylon Lock Nut	8
78	LSP30MD-02000	Manual Canister	1
79	LSP25-10009	Gear Pump Flat Key	1
80	9101-08030-DX8.8	M8x30 Hex Bolt	4
81	LSP25-00008-DX	Safety Pin	2

LIMITED WARRANTY

Duration of Warranty

For 3 years from the date of purchase, YTL International will replace or repair defects in material and workmanship for the original purchaser of the log splitter. For 2 years, the engine warranty is covered per the engine manufacturer's warranty. For 1 year from date of purchase, YTL International will replace the hydraulic system component parts. The warranty will not apply to any unit which was not assembled correctly, misused, overloaded or which has been used or operated contrary to our instructions, or which has been repaired or altered by anyone other than an authorized service representative.

Warranty Exclusions

The warranty does not cover cosmetic defects such as paint and decals. The warranty excludes components that wear out with ordinary use over time, such as tires. The warranty does not cover failures or problems due to acts of God and events or forces beyond the control of the manufacturer.

Normal Wear Exclusions

The log splitter needs periodic service to perform well. The warranty does not cover repair when normal use has exhausted the life of a part or the equipment as a whole.

Installation, Use and Maintenance Exclusions

The warranty does not apply to parts and/or labor if the log splitter has been misused, neglected, involved in an accident, abused, loaded beyond its' limits, modified or assembled incorrectly. Normal maintenance is not covered under the warranty.

Limits of Implied Warranty and Consequential Damage Exclusions

YTL International disclaims any obligation to cover any loss of time, use of this product, freight, or any incidental or consequential claim by anyone incurred from using the log splitter. THIS WARRANTY IS IN LIEU OF ALL OTHER WARRANTIES, EXPRESS OR IMPLIED, INCLUDING WARRANTIES OF MERCHANTABILITY OR FITNESS FOR A PARTICULAR PURPOSE.

An exchanged log splitter unit will be subject to the original warranty date. The length of the warranty governing the exchanged unit will be calculated from the purchase date of the original unit. The warranty gives you certain legal rights which may change from state to state. Your state may also have other rights you may be entitled to that are not listed within this warranty.

Contact Information

YTL International Inc.
17517 Fabrica Way Suite H
Cerritos, CA 90703
Phone: (888) 723-6534
Email: parts@ytlinternational.com
Website: www.ytlinternational.com

Contact for Warranty and Service

For service, please contact:
Warranty & Customer Support Questions
Toll Free: (888) 723-6534