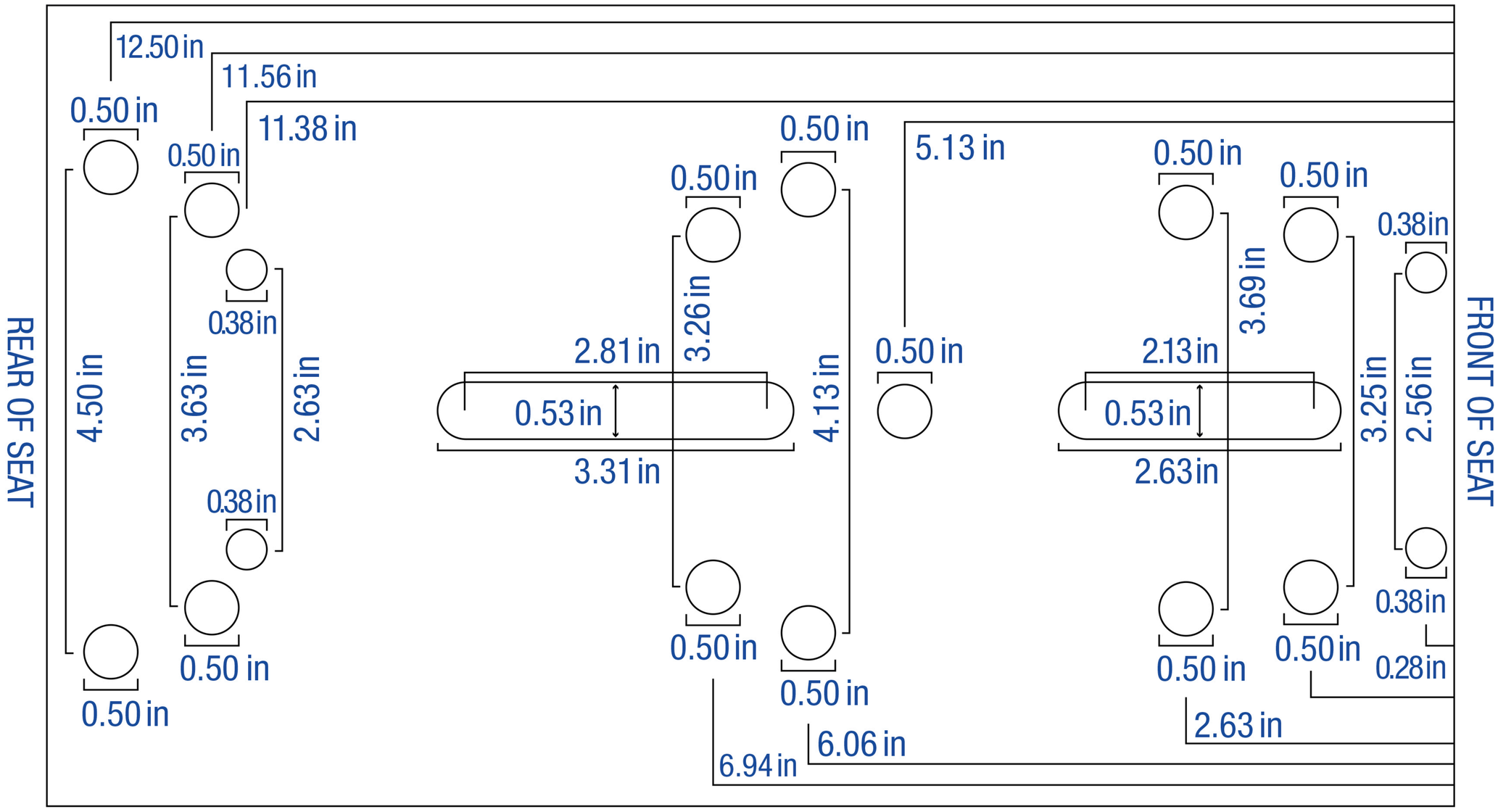
12.50 in
11.56 in
11.38 in
0.50 in
0.50 in
0.38 in
0.50 in
0.50 in
5.13 in
0.50 in
0.50 in
0.38 in
3.26 in
3.69 in
REAR OF SEAT
4.50 in
3.63 in
2.63 in
2.81 in
0.53 in
3.31 in
4.13 in
0.50 in
2.13 in
0.53 in
2.63 in
3.25 in
2.56 in
FRONT OF SEAT
0.38 in
0.38 in
0.50 in
0.50 in
0.50 in
0.50 in
0.50 in
0.50 in
0.28 in
2.63 in
6.06 in
6.94 in